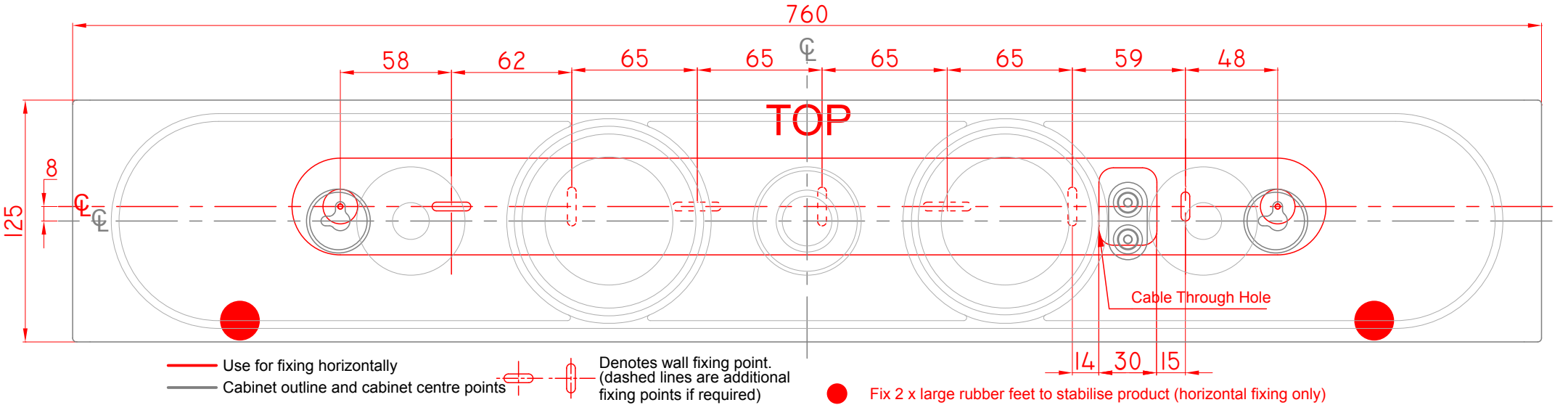
760
58
62
65
65
65
65
59
48
TOP
8
125
Cable Through Hole
14
30
15
Use for fixing horizontally
Cabinet outline and cabinet centre points
Denotes wall fixing point.
(dashed lines are additional
fixing points if required)
Fix 2 x large rubber feet to stabilise product (horizontal fixing only)